# PPD

# Piston Gauge

WINTERS INSTRUMENTS

## Features

- Cost effective and reliable.
- Simple and compact design.
- Easy to read dial instruments eliminates accumulated errors of two instruments installations.
- High operating pressure up to 200 bar.
- Differential pressure range upto 10 bar
- Over pressure safe from either side to maximum working pressure.
- Adjustable reed contact switching.
- Indicating mechanism isolated from pressure chamber
- Only switch is also available.
- Wide application in air, gas and liquid media

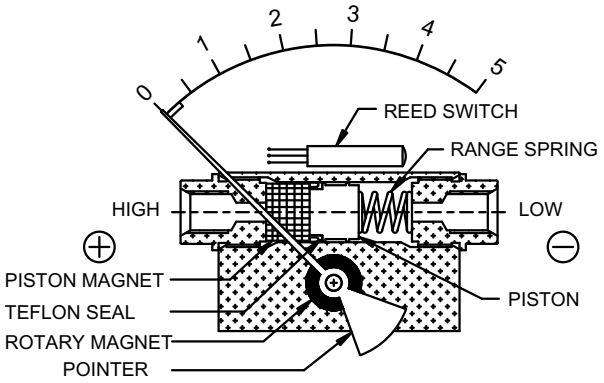


## Applications

Filters,Hydraulic systems, Water treatment plants, Chemical plants, Natural gas processing, Heat exchangers, Gasoline / Diesel engine filters, Pumps and Valves, Compressors.

## Specifications

**Dial**
2"(50mm), 2.5"(63mm), 3.5"(80mm), 4"(100mm) 4.5"(115mm) & 6"(150mm)

**Case**
Stainless steel case or flange

**Body Material**
316 stainless steel, aluminium, brass or Monel

**Wetted parts**
Body material, PTFE, SS 304 spring, screw and ceramic magnet.

**Connection**
1/4", 1/2", 3/8" in NPT, BSP, BSPT

**Seals**
Buna-N (Standard) or Viton

**Porting**
In line, Back & Bottom

**Migration of media**
Marginal

**Protection**
IP 65

**Accuracy**
±2% (Ascending)

**Window**
Glass, acrylic or toughened glass

**Pressure range**
0-0.25 to 0-10 bar (0-5psi to 0-150 psi)

**Working pressure**
200 bar / 3000 psi for Aluminium
400 bar / 6000 psi for 316 SS

**Media Temperature**
80˚C/ 175 ˚F

**Operating principle**
Magnetic coupling using piston & spring.

**Switch**
SPST or SPDT, one or two. Switches are field adjustable. The set points can be increased or decreased externally with a simple screwdriver adjustments. When two switches are used, either switch can be adjusted independently.

**Options**
Glycerine filling, maximum adjustable pointer, dual scale
Direct, front panel flange, 2" pipe mounting
Other connection size available
Other internal parts in Aluminium, or SS-316 as per the body

***Order Information***
*Series/ Dial Size/ Case Materials/ Wetted Parts/ Configuration/ Connection Size/ Thread/ Range/ Option*

## Dimensions

### Standard Dimensions

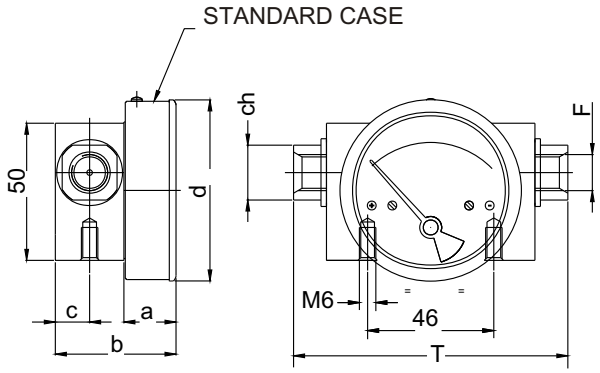


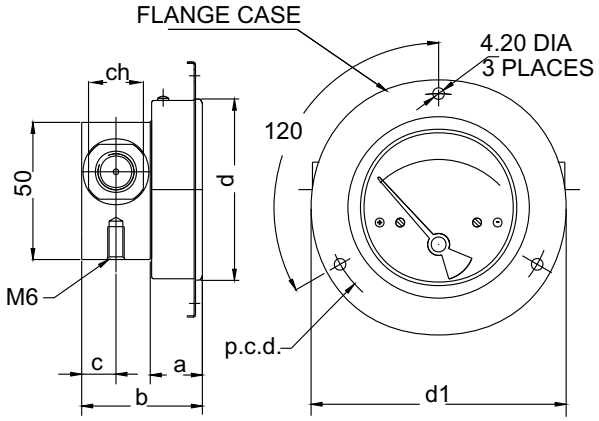


| DIAL Ø | F | a | b | c | d | d1 | T | ch | p.c.d. |
|---|---|---|---|---|---|---|---|---|---|
| 50 (2") | 1/4"BSP - 1/4"NPT | 18 | 43 | 12.5 | 53 | 79 | 100 | 20 | 69 |
| 63 (2.5") | 1/4"BSP - 1/4"NPT | 19 | 44 | 12.5 | 66 | 93 | 100 | 20 | 83 |
| 80 (3.5") | 1/4"BSP - 1/4"NPT | 19 | 44 | 12.5 | 83 | 109 | 100 | 20 | 99 |
| 100 (4") | 1/4"BSP - 1/4"NPT | 19 | 44 | 12.5 | 104.3 | 131 | 100 | 20 | 121 |
| 115 (4.5") | 1/4"BSP - 1/4"NPT | 19 | 44 | 12.5 | 119.7 | 146 | 100 | 20 | 136 |
| 150 (6") | 1/4"BSP - 1/4"NPT | 19 | 44 | 12.5 | 154.3 | 181 | 100 | 20 | 171 |

* PANEL CUT OUT = d+ 1

### Mounting Brackets

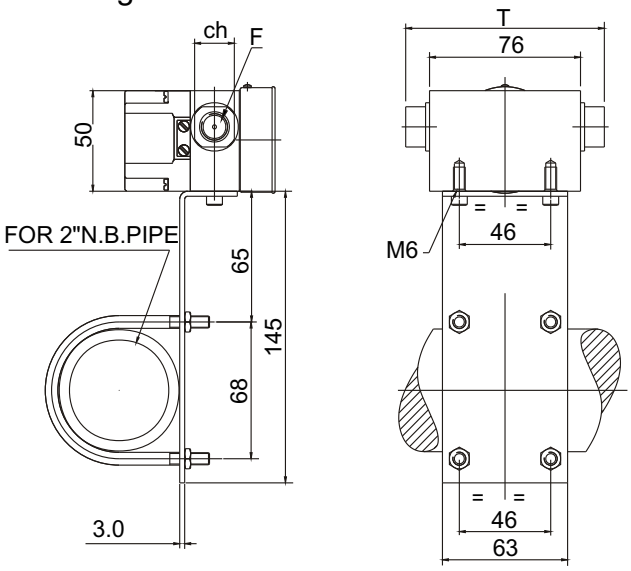


BRACKET MOUNTING FOR GAUGE+ SWITCH

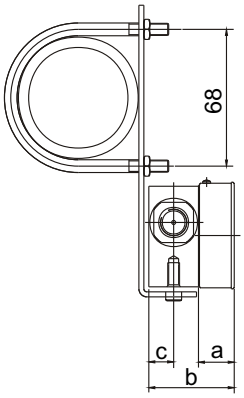


BRACKET MOUNTING FOR GAUGE

| DIAL O | F | a | b | c | T | ch |
|---|---|---|---|---|---|---|
| 50 (2") | 1/4"BSP - 1/4"NPT | 18 | 43 | 12.5 | 100 | 20 |
| 63 (2.5") | 1/4"BSP - 1/4"NPT | 19 | 44 | 12.5 | 100 | 20 |
| 80 (3.5") | 1/4"BSP - 1/4"NPT | 19 | 44 | 12.5 | 100 | 20 |
| 100 (4") | 1/4"BSP - 1/4"NPT | 19 | 44 | 12.5 | 100 | 20 |
| 115 (4.5") | 1/4"BSP - 1/4"NPT | 19 | 44 | 12.5 | 100 | 20 |
| 150 (6") | 1/4"BSP - 1/4"NPT | 19 | 44 | 12.5 | 100 | 20 |

# PPD - Piston Gauge

## Gauge + Switch with reed contacts with DIN plug at back

| DIAL | F | d | b1 |
|---|---|---|---|
| 50 (2") | 1/4"BSP - 1/4"NPT | 53 | 102.5 |
| 63 (2.5") | 1/4"BSP - 1/4"NPT | 66 | 103.5 |
| 80 (3.5") | 1/4"BSP - 1/4"NPT | 83 | 103.5 |
| 100 (4") | 1/4"BSP - 1/4"NPT | 104.3 | 103.5 |
| 115 (4.5") | 1/4"BSP - 1/4"NPT | 119.7 | 103.5 |
| 150 (6") | 1/4"BSP - 1/4"NPT | 154.3 | 103.5 |

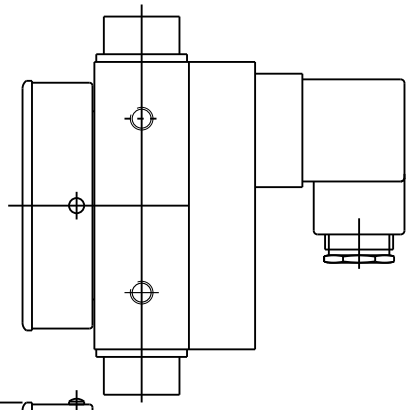

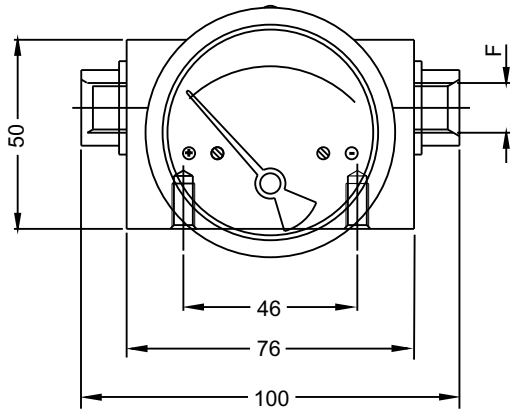


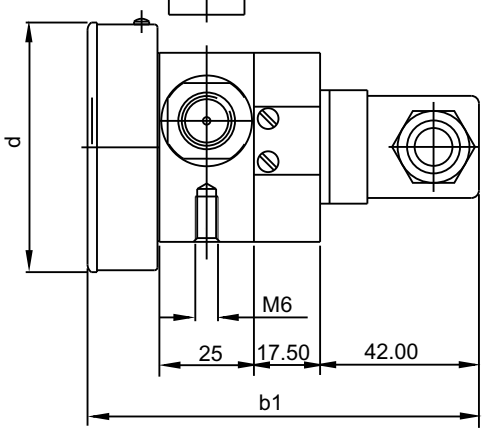


## Gauge + Switch with reed contacts with DIN plug on top

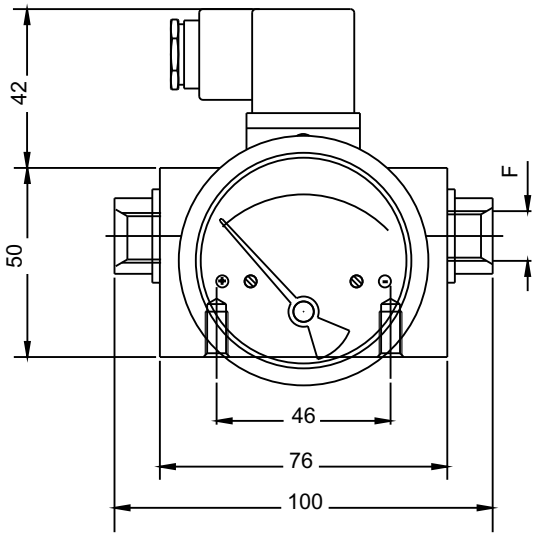


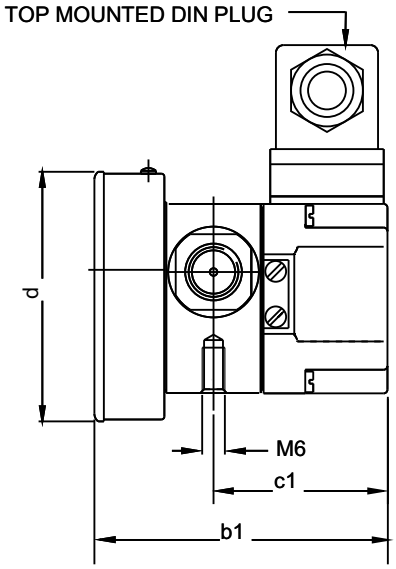


| DIAL | F | b1 | c1 | d |
|---|---|---|---|---|
| 50 (2") | 1/4"BSP - 1/4"NPT | 78 | 47.5 | 53 |
| 63 (2.5") | 1/4"BSP - 1/4"NPT | 79 | 47.5 | 66 |
| 80 (3.5") | 1/4"BSP - 1/4"NPT | 79 | 47.5 | 83 |
| 100 (4") | 1/4"BSP - 1/4"NPT | 79 | 47.5 | 104.3 |
| 115 (4.5") | 1/4"BSP - 1/4"NPT | 79 | 47.5 | 119.7 |
| 150 (6") | 1/4"BSP - 1/4"NPT | 79 | 47.5 | 154.3 |

# PPD - Piston Gauge

Switch with DIN plug at back

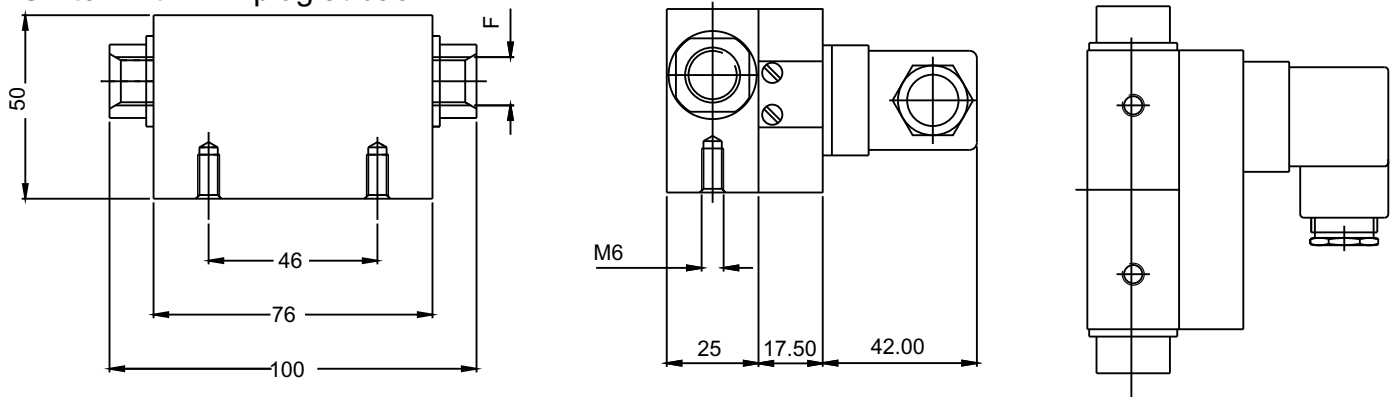


F=1/4" NPT - 1/4" BSP

Switch with DIN plug on top

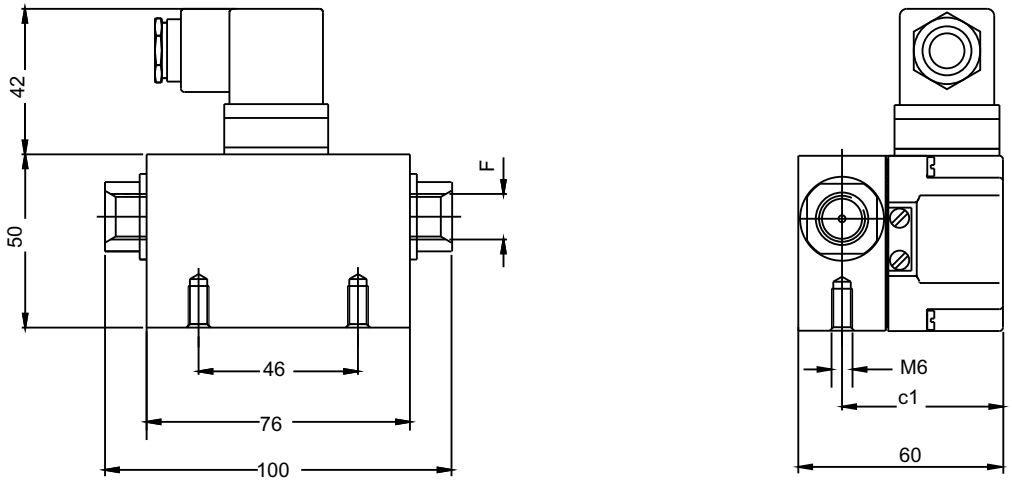


F=1/4" NPT - 1/4" BSP , C1=47.5

Gauge + Switch with reed contacts with terminal strip &1/2" conduit connection

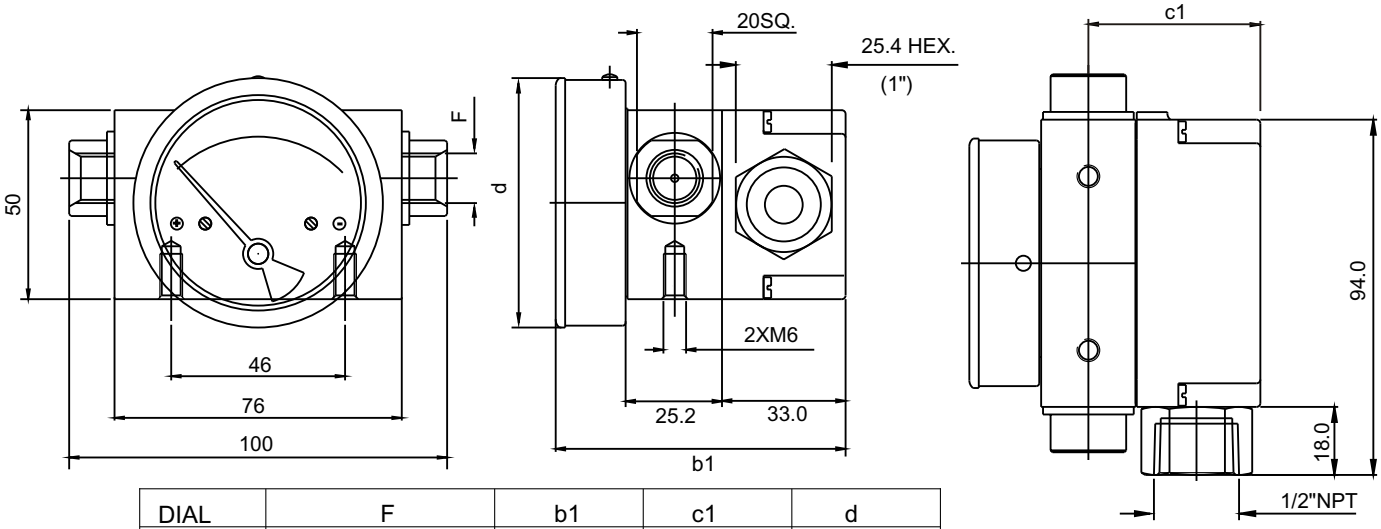


| DIAL | F | b1 | c1 | d |
|---|---|---|---|---|
| 50 (2") | 1/4"BSP - 1/4"NPT | 78 | 47.5 | 53 |
| 63 (2.5") | 1/4"BSP - 1/4"NPT | 79 | 47.5 | 66 |
| 80 (3.5") | 1/4"BSP - 1/4"NPT | 79 | 47.5 | 83 |
| 100 (4") | 1/4"BSP - 1/4"NPT | 79 | 47.5 | 104.3 |
| 115 (4.5") | 1/4"BSP - 1/4"NPT | 79 | 47.5 | 119.7 |
| 150 (6") | 1/4"BSP - 1/4"NPT | 79 | 47.5 | 154.3 |

## Ordering Code PPD

| | Example | Code | Descriptions | | |
|---|---|---|---|---|---|
| Series | PPD | | | | |
| Type | W | G | Gauge | S | Switch |
| | | W | Gauge + Switch | | |
| Body material | B | A | Aluminium | B | Brass |
| | | S | 316 stainless steel | M | Monel |
| | | H | Heavy duty Al. (5000 psi) with 32mm thick body. | | |
| Dial size | 35 | 20 | 2.0" (50 mm) | 40 | 4.0" (100 mm) |
| | | 25 | 2.5" (63 mm) | 45 | 4.5" (115 mm) |
| | | 35 | 3.5" (80 mm) | 60 | 6.0" (150 mm) |
| Connection | 4N | 4B | 1/4" BSP (Female) (On request,longer lead time) | | |
| | | 4N | 1/4" NPT (Female) | | |
| | | 4T | 1/4" BSPT (Female) (on request,longer lead time) | | |
| | | ZZ | Special connection sizes using adaptor | | |
| Porting | 1 | 1 | In-line (Standard) | 3 | Bottom |
| | | 2 | Rear / Back | 6 | In-line & Bottom |
| Case type | SS | SS | SS 304 with a rubber ring (standard) | | |
| | | SF | SS 304 flange with a rubber ring (standard flange) | | |
| Window | A | F | Glass (standard) | A | Acrylic |
| | | T | Toughened glass | | |
| Seal | B | B | Buna-N (standard) | E | EPDM |
| | | V | Viton | | |
| Switch | 3 | 0 | None | | |
| | | 1 | One SPST, with a DIN plug* | | |
| | | 2 | One SPST, with a terminal strip | | |
| | | 9 | One SPST, with built in relay | | |
| | | 3 | Two SPSTs, with a DIN plug* | | |
| | | 4 | Two SPSTs, with a terminal strip | | |
| | | 5 | One SPDT, with a DIN plug* | | |
| | | 6 | One SPDT, with a terminal strip | | |
| | | 7 | Two SPDTs, with two DIN plugs* | | |
| | | 8 | Two SPDTs, with a terminal strip | | |

* DIN plug : *we mount it on the top,on the plastic switch cover. However we can mount it at the back as a request*

**SPST Specifications**
5 VA AC or DC (max)
175 V AC or DC (max)
0.25 Amp AC or DC (max)

**Built in relay**
230 V AC, 1 Amps.

**SPST Specifications**
10 VA AC or DC (max)
150 V AC or DC (max)
0.5 Amp AC or DC (max)

**Standard Ranges** 2.5 bar

| | | | | | | | | | | | | | | | | | | | |
|---|---|---|---|---|---|---|---|---|---|---|---|---|---|---|---|---|---|---|---|
| Kg/cm | 0.25 | - | 0.5 | 0.75 | 1 | - | 1.6 | 2 | - | 2.5 | 3 | 3.5 | 4 | 5 | - | 6 | 7 | 9 | 10 |
| bar | 0.25 | - | 0.5 | 0.75 | 1 | - | 1.6 | 2 | - | 2.5 | 3 | 3.5 | 4 | 5 | - | 6 | 7 | 9 | 10 |
| Mbar | 250 | - | 500 | 750 | 1000 | - | - | - | - | - | - | - | - | - | - | - | - | - | - |
| psi | - | 5 | 8 | - | 15 | 20 | 25 | 30 | 40 | - | 40 | 50 | 60 | - | 80 | - | 100 | - | - |
| kPa | 25 | - | 50 | 75 | 100 | - | 160 | 200 | - | 250 | 300 | 350 | 400 | 500 | - | 600 | 700 | 900 | 1000 |

*Other ranges on request.*

| | | | |
|---|---|---|---|
| Options | BC | 0 | None |
| | | A | Glycerine filling (Affects accuracy) |
| | | B | Red follower pointer on acrylic window (Affects accuracy) |
| | | C | Dual scale |
| | | D | Colour band |
| | | E | Strainer in (+) connection |
| | | F | Reverse Port** |
| | | D | NACE |
| | | E | Silicone Oil* |

**Limitations for making combinations:**
- Glycerine filling will not have follower pointer
- No follower pointer available in 6"(150 mm)

Specifications and dimensions given in this leaflet represent the state of engineering at the time of printing, modifications may take place and materials specified may be replaced by others without prior notice.



WINTERS INSTRUMENTS
asiasales@winters.com
www. winters.com